Ames Lab Instrumentation Notification System

Dec 15-11 : Scott Hood, Daniel Keith, Shiai Liu, Luke McDonald, Eric Graika
Adviser: Lee Harker
Client: Matt Besser, Ames Laboratory

Problem

Ames Laboratory is known for conducting many different types of experiments, many of which are long term and are left to run while the scientists are elsewhere. Leaving an experiment to run without supervision causes a lot of concern regarding whether it ran correctly and whether the equipment is at any risk. There is equipment available that solve these problems, but most of which are overly expensive and not very adaptable to different styles of experiments. Therefor a system was needed that was not only affordable but easily reproducible and effectively notified personnel of concerns.

Block Diagram

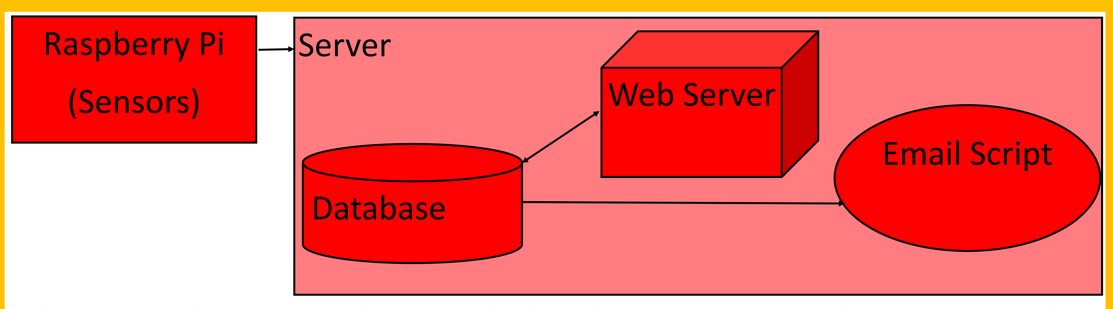

Above is a block diagram which explains the flow of the system. The raspberry pi sends its data to the database which is then interpreted by the Web Server and Email Script. User input then is sent back from the web server to the data base which is saved throughout experiment life cycle.

Automatic E-mail Warnings

```
$to = $row['email'];
$subject = "Warning: Machine at Risk";
$txt = "This email is to notify you that a machine is at risk\
$headers = "From: instrmon@ameslab.gov";

mail($to,$subject,$txt,$headers);
```

The notification system is a PHP script that checks hourly values in the database. Then uses built in PHP functions and SMTP authentication to notify appropriate personnel. Checks the database hourly, converting the voltage to Celsius, PSI, MPa depending upon user selection. Appropriate personnel the machine and sensor which was found to be a potential hazard.

User Interface

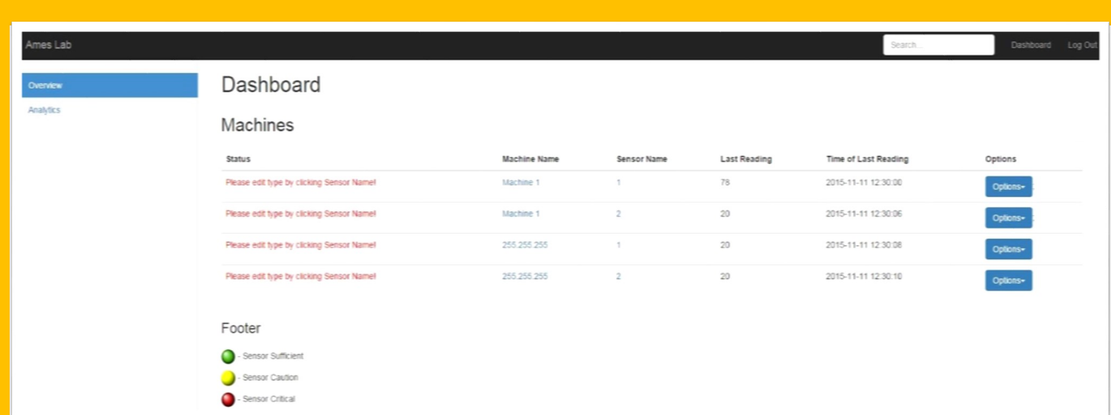

The dashboard that shows the status of every sensor. If the sensor's type has not been set it will display in red that it needs to be set. To set the sensors type and other information an admin has to log in and click the associated machine and edit the information.

Software Detail

Web Server	SQL	PHP Scripts
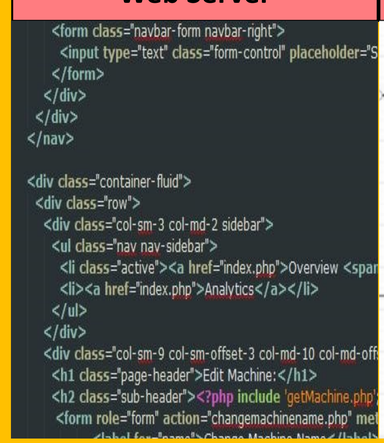	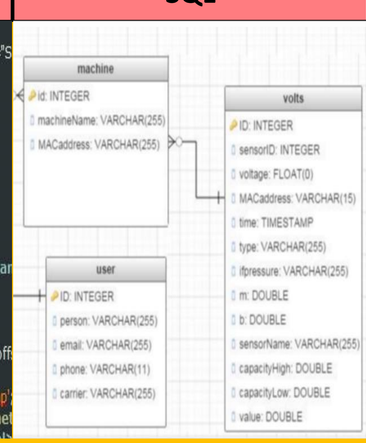	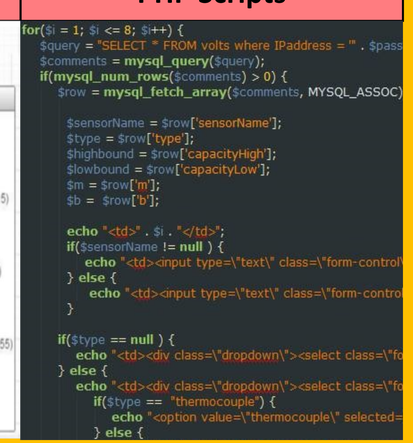

Solution

Ames Lab had a fair amount of on site resources to create a simple notification system. Using Ames Lab server networks and affordable parts from outside sources, an effective solution was to create a reproducible in house notification system.

Using a Raspberry Pi and a on site web client, users could decide what to monitor during the experiments process and be able to track the progress of their experiment from the values recorded by the Raspberry Pi

Design Requirements

Functional Requirements

- **Data Interpretation:** Being able to interpret voltages into thermal readings and gas pressure readings
- **Alert System:** Being able to alert appropriate personnel of equipment concerns.
- **Affordable:** To the point where reproducing the equipment didn't break the budget.

Non-Functional Requirements

- **Viewing Real Time:** The ability to view recent data via a graphical formal.
- **Checking Status:** Easily able to identify equipment errors using the user interface and view sensors which are malfunctioning.
- **Storing Data:** Capability of storing collecting all data from experiments run cycle.

Hardware Detail

Raspberry Pi Box

- **Raspberry Pi:** Commits a voltage , Timestamp, MAC address, and Channel ID for each of the 8 channels to the database from the ADC Pi every two minutes. Also rescales the signals from 0-5V to 0-15V to restore the original sensor output signal.
- **ADC Pi module:** Can only collect signals in the 0 to 5V range. The ADC Pi job is to read eight signals from voltage dividers which scale down the voltage from 0-15V range to 0-5V to be correctly read.

- **Supported Sensors:**
  - **Thermocouples:** R,K,L,J,S, and E type thermocouples due to the type of thermocouple amplifier were using. Which converts all the different thermocouple signals into a simple conversion of one degree Celsius per 10 millivolts.
  - **Gas Transducers:** There are many different types of gas transducers but so long as they have a output signal less than 15V and use the linear equation (y=mx+b) were able to support it. M and B are different between gas transducers but our website allows the user to input a value for M and B during the configuration of a sensor.
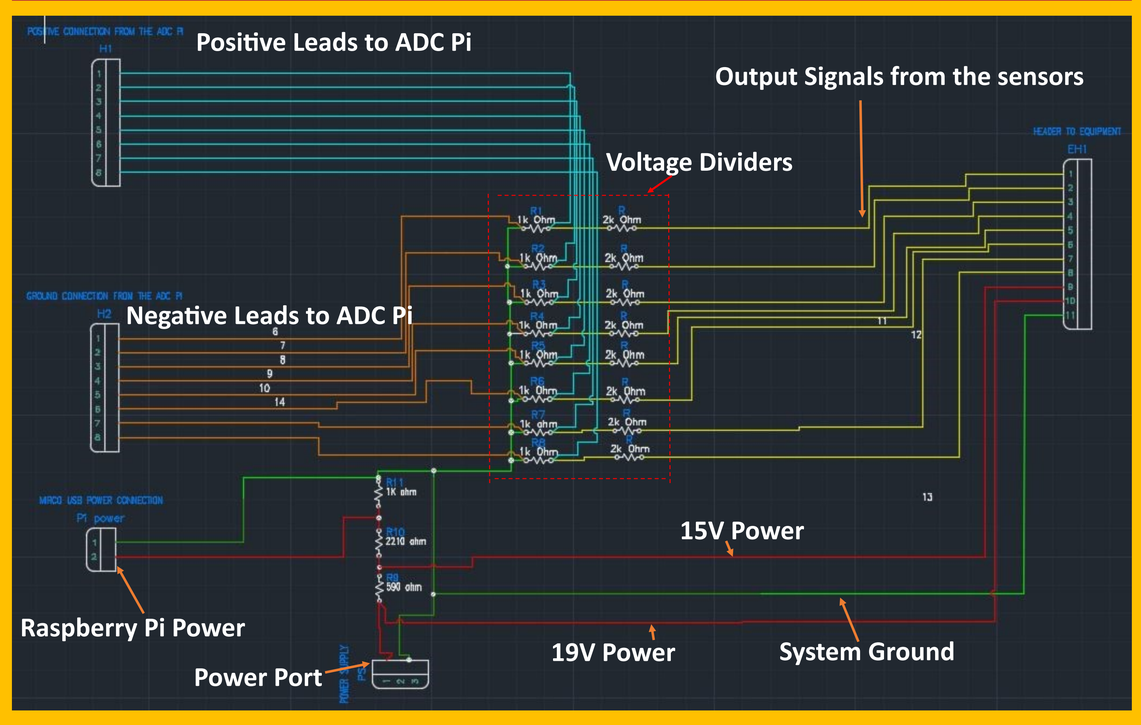
Interial Wiring Diagram